Design Features

-Simple and streamlined design for smooth flow.
-Minimum noise for direct or back flow.
-Backflow velocity only 0.2s
-Head loss is only 0.1 Bar with 2m/s
-EPDM/NBR Rubber fully coated disc.
-Spindle shaped flow guide
-Negative pressure zone anti-erosion design
-Floating movable trims with self-adjusting ball
-Self-cleaning stem for long time smooth operation.

Specifications

Item	Technical Parameters
Size	NPS2-NPS24 (DN50-DN600)
PN	PN10/16/25
Medium	Fresh water
Temperature	0℃~70℃

Standard Materials Selection

NPS2-NPS14 (DN50-DN350)

No.	NAME	MATERIAL
1	Body	DIN EN1563-GJS-500-7
2	Disc	DIN EN1563-GJS-500-7+EPDM
3	Spring	AISI 304
4	O-Ring	NBR
5	Stem	AISI 304
6	Washer	EPDM
7	Nut	AISI 304
8	Bushes	ASTM B150-B150M C61900
9	Flow Guide	DIN EN1563-GJS-500-7
10	Screw	A2

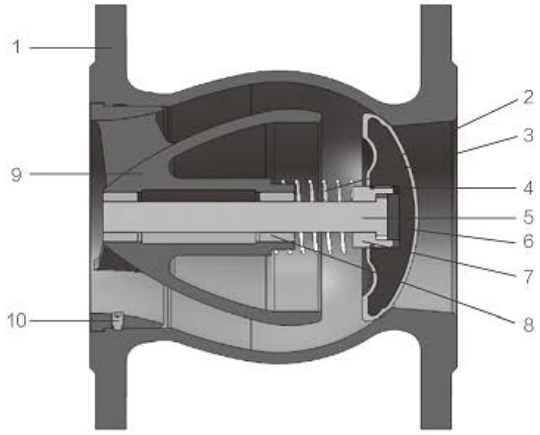

NPS16-NPS24 (DN400-DN600)

No.	NAME	MATERIAL
1	Body	DIN EN1563-GJS-500-7
2	Disc	DIN EN1563-GJS-500-7+EPDM
3	Spring	AISI 304
4	Stem	AISI 304
5	Washer	EPDM
6	Nut	AISI 304
7	Bushes	ASTM B150-B150M C61900
8	Plug	DIN EN1563-GJS-500-7
9	Flow Guide	DIN EN1563-GJS-500-7
10	Screw	A2

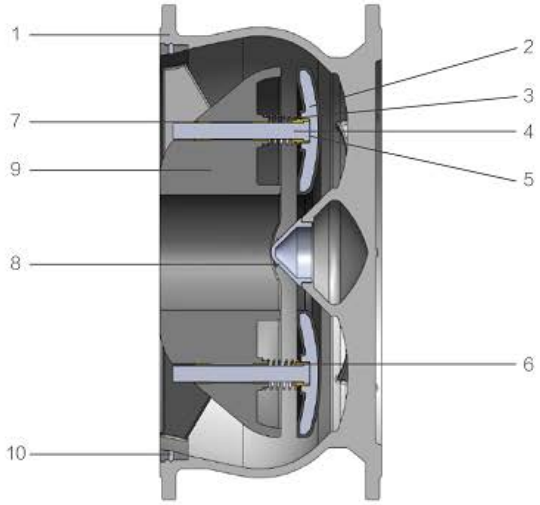

Design Standard

Design Standard	BS EN1074-3 BS EN 12334
Face to Face	GB12221/ EN 558-1 / ISO 5752 Series 14
Flange Standard	GB17241.6/EN 1092-2/ISO 7005-2
Pressure Test	BS EN12266

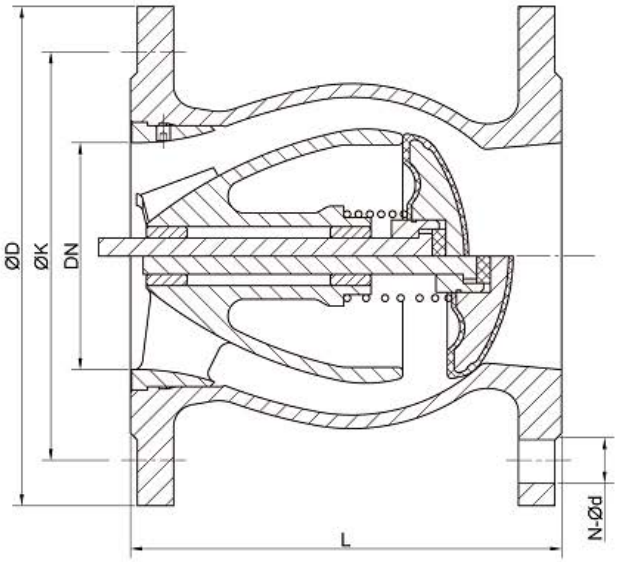

NPS2-NPS14 (DN50-DN350)

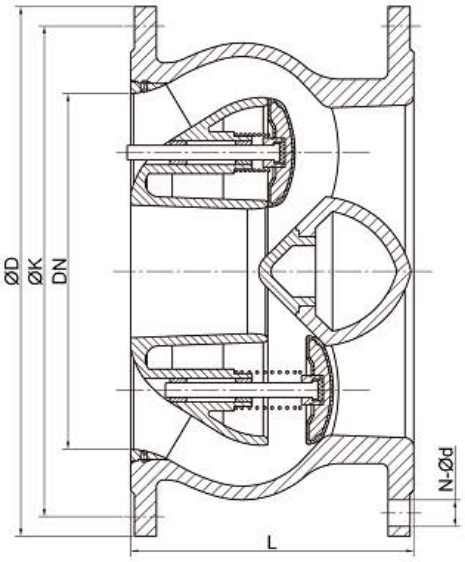

NPS16-NPS24 (DN400-DN600)

METRIC DIMENSIONS:Millimeters

NPS2-NPS24 (DN50-DN600) Flange with alignment holes										
Size	L	ØD			ØK			N-Ød		
		PN10	PN16	PN25	PN10	PN16	PN25	PN10	PN16	PN25
DN50	150	165	165	165	125	125	125	4-Ø19	4-Ø19	4-Ø19
DN65	170	185	185	185	145	145	145	4-Ø19	4-Ø19	8-Ø19
DN80	180	200	200	200	160	160	160	8-Ø19	8-Ø19	8-Ø19
DN100	190	220	220	235	180	180	190	8-Ø19	8-Ø19	8-Ø23
DN125	200	250	250	270	210	210	220	8-Ø19	8-Ø19	8-Ø28
DN150	210	285	285	300	240	240	250	8-Ø23	8-Ø23	8-Ø28
DN200	230	340	340	360	295	295	310	8-Ø23	12-Ø23	12-Ø28
DN250	250	405	405	425	350	355	370	12-Ø23	12-Ø28	12-Ø31
DN300	270	460	460	485	400	410	430	12-Ø23	12-Ø28	16-Ø31
DN350	290	520	520	555	460	470	490	16-Ø23	16-Ø28	16-Ø34
DN400	310	580	580	620	515	525	550	16-Ø28	16-Ø31	16-Ø37
DN450	330	615	640	670	565	585	600	20-Ø28	20-Ø31	20-Ø37
DN500	350	670	715	730	620	650	660	20-Ø28	20-Ø34	20-Ø37
DN600	390	780	840	845	725	770	770	20-Ø31	20-Ø37	20-Ø40

Drawings are for reference only. RKSfluid reserves the right to change product dimensions without notice.